4K AV over IP H.264/H.265 Dual Encoder with Whiteboard Annotation, Multi-View & USB 3.0

SW-0402N-INK

WyreStorm

Quickstart Guide

WyreStorm recommends reading through this document in its entirety to become familiar with the product's features prior to starting the installation process.

IMPORTANT! Installation Requirements

- Read through the Wiring and Connections section for important wiring guidelines before creating or choosing premade cables.
- While these products support CEC for the HDMI outputs, WyreStorm cannot guarantee compatibility with all forms of CEC communication.
- Visit the product pages to download the latest firmware, document version, additional documentation, and configuration tools.

In the Box

1x SW-0402N-INK
1x DC 20V 10A Power Adapter (US/UK/EU/AU)
1x 4-pin Phoenix Connector (for RS-232)
1x 5-pin Phoenix Connector (for Audio Out)
4x Mounting Brackets (with Screws)
1x Quickstart Guide (This Document)

Basic Wiring Diagram

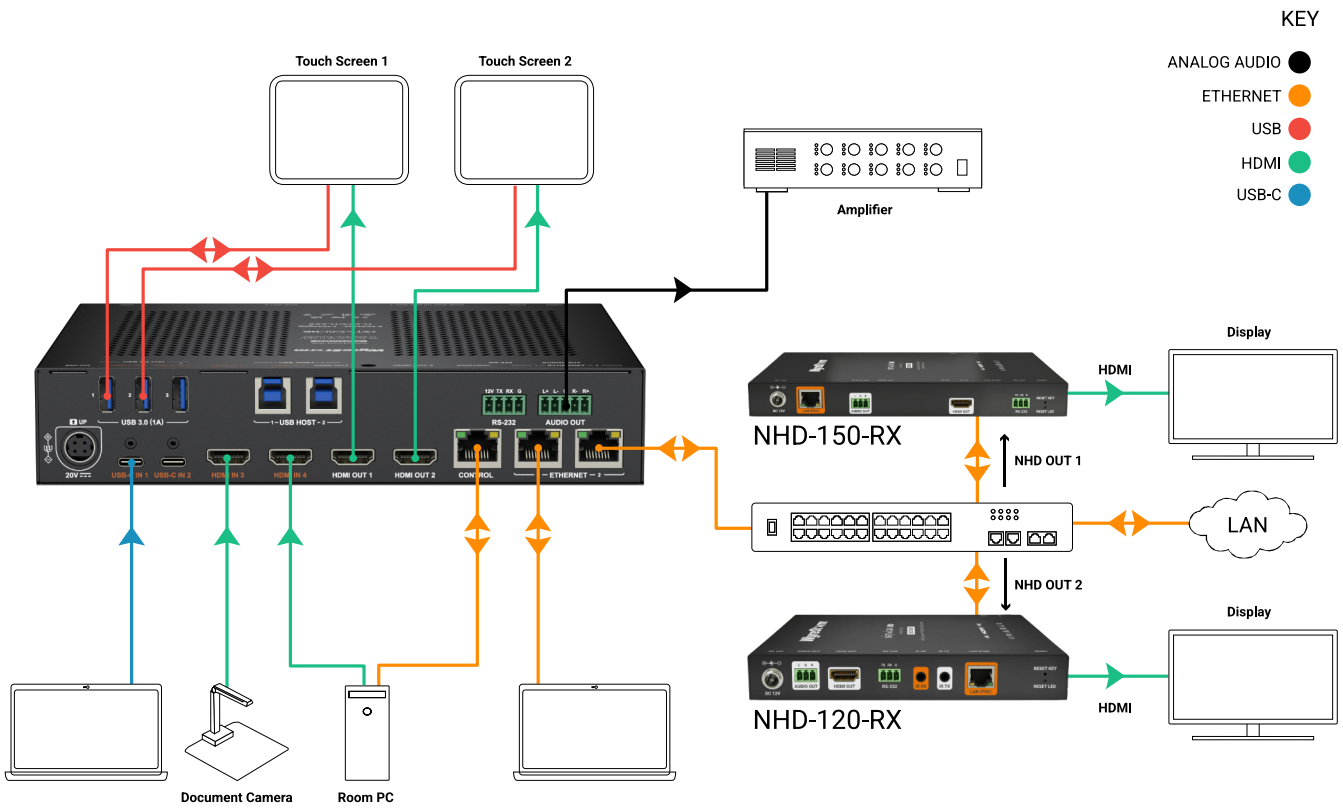

Wiring and Connections

WyreStorm recommends that all wiring for the installation is run and terminated prior to making connections to the switcher. Read through this section in its entirety before running or terminating any wires to ensure proper operation and to avoid damaging the equipment.

⚠ IMPORTANT! Wiring Guidelines

The use of patch panels, wall plates, cable transmitters, kinks in cables, and electrical or environmental interference will have an adverse effect on signal transmission which may limit performance. Steps should be taken to minimize or remove these factors completely during installation for best results.

- WyreStorm recommends using pre-terminated HDMI, USB and Ethernet cables due to the complexity of these connector types. Using pre-terminated cables will ensure that these connections are accurate and will not interfere with the performance of the product.
- This product contains two USB-C connections that can be used as an audio/video input. When using this connection verify that the USB-C cable used supports audio/video functionality as not all USB-C cables support this requirement.

Audio Connections

A 5-pin Phoenix connector is used for balanced stereo audio output.

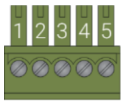

WyreStorm Connector			3rd Party Device
Pin 1	Left Positve (L+)	---> To --->	Left Positive (L+)
Pin 2	Left Negative (L-)	---> To --->	Left Negative (L-)
Pin 3	Ground (G)	---> To --->	Ground (G)
Pin 4	Right Negative (R-)	---> To --->	Right Negative (R-)
Pin 5	Right Positive (R+)	---> To --->	Right Positive (R+)

Communication Connections

RS-232 Wiring

The SW-0402N-INK uses a 4-pin Phoenix RS-232 connector with no hardware flow control. Most control systems are DTE where pin 2 is TX. Refer to the connected device's documentation to confirm correct pin assignments.

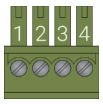

WyreStorm Connector			3rd Party Device
Pin 1	12V DC Out	No Connection	Reserved
Pin 2	TX (Transmit)	---> To --->	RX (Receive)
Pin 3	RX (Receive)	---> To --->	TX (Transmit)
Pin 4	G (Ground)	**---> To --->**	12V Power

Setup and Configuration

Access the SW-0402N-INK's settings through its Web User Interface by entering the unit's IP address into your preferred web browser. By default, the unit is configured to use DHCP for network connection.

To obtain the IP address of your SW-0402N-INK:

1. Connect the CONTROL port (or any ETHERNET port in Transparent mode) to your local area network.
2. Briefly press the recessed RESET button or the SELECT button on the front panel to display the IP address.
3. The OSD shows the current device name, IP address, and firmware version.
4. Enter the IP address into a browser, log in with the default password (admin), and follow the prompt to set a new password.

RS-232 and IP Settings

Baud Rate:	115200
Data Bits:	8bits
Parity:	None
Stop Bits:	1bit
Flow Control:	None
Default IP Address:	DHCP
Default Web Password:	admin
Default IP Port:	23 (Telnet) / 22 (SSH)

OSD (On-Screen Display)

The SW-0402N-INK uses an OSD to convey basic device information directly on the connected display. Briefly pressing the recessed RESET button on the front panel activates the OSD for 10 seconds, showing the device name, IP address, and firmware version.
The OSD is hidden while whiteboard annotation is active on any HDMI output and will reappear once annotation is disabled.

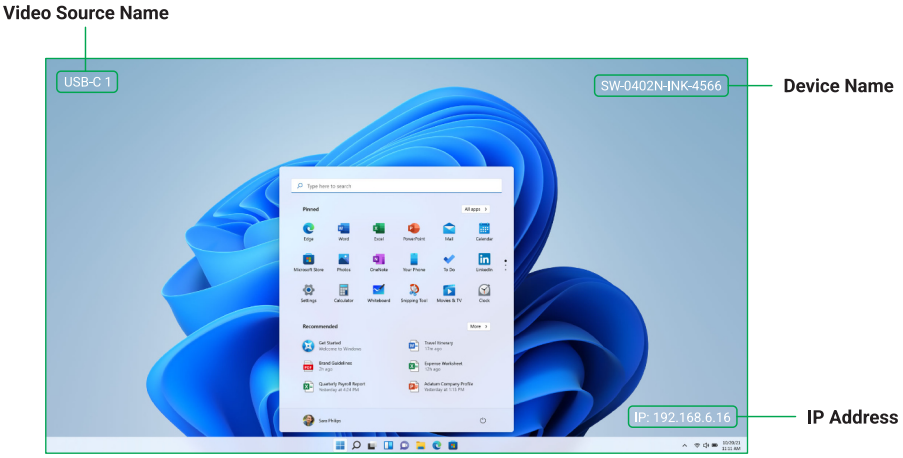

Features

- Provides two USB-C inputs and two HDMI inputs
- Two HDMI outputs (OUT 1 supports up to 4K@60Hz; OUT 2 up to 4K@30Hz)
- Two NHD encoded stream outputs over Ethernet (H.264/H.265)
- USB-C inputs support up to 60W PD charging, 1000BASE-T Ethernet, and USB 3.0 data
- Integrated whiteboard annotation engine (INK) for real-time drawing on HDMI OUT 1–2
- Supports input resolutions up to 4K@30Hz 4:4:4
- Supports output resolutions up to 4K@60Hz 4:4:4 (HDMI OUT 1 only)
- Fast, seamless switching in single-view and multi-view modes (up to quad-view)
- Independent balanced stereo analog audio output
- Built-in quadruple USB 3.0 switcher for switching among four USB hosts
- Three Ethernet ports (CONTROL + ETHERNET 1–2) for flexible, secure networking
- Transparent and Isolation network modes for flexible deployment
- Detailed, user-friendly OSD information
- Control options: front panel buttons, Web UI, Telnet/SSH API, and RS-232

CE

Manufacturer. WyreStorm Technologies ProAV Corporation
Address: 27 Wood Road, Suite 100, Round Lake, NY 12151
Model: SW-0402N-INK

Troubleshooting

No or Poor Quality Picture (snow or noisy image)

- Verify HDMI and USB-C input/output connections are secure and cables are functioning correctly.
- Ensure USB-C cables are full-featured; not all USB-C cables carry video signals.
- Verify the output resolution of the source and display are supported by this switcher.
- Configure EDID settings to a lower resolution via the Web UI.
- If transmitting 4K, verify that all cables used are 4K-rated.

NHD Stream Not Visible on Decoder

- Verify the decoder and encoder are on the same network or VLAN.
- Check that streaming is enabled in the Web UI under Status → NHD Stream Output.
- Confirm the NHD controller (e.g. NHD-CTL-PRO) is correctly configured with the encoder's stream name and IP.

No or Intermittent 3rd Party Device Control

- Verify the RS-232 cable is correctly terminated and pin assignments match the controlled device.
- If using IP control, ensure the switcher and control system are on the same IP range.

Whiteboard Annotation Not Working

- Ensure the touch display is connected to both HDMI OUT and the corresponding USB-A port (e.g. OUT 1 + USB-A 1).
- Enable the annotation function in Web UI → System → Annotation, then calibrate the coordinate system.
- If the output resolution has changed, recalibrate the touch coordinate system.

Copyright © 2026 WyreStorm ProAV Corporation | wyrestorm.com

INT: +44 (0) 1793 230 343 | US: 844.280.WYRE (9973)
support@wyrestorm.com

Specifications

Audio and Video	
Inputs	2x HDMI In: 19-pin Type A (HDMI 1.4, HDCP 1.4) 2x USB-C (DisplayPort 1.1, HDCP 1.4; 60W PD; 1000BASE-T; USB 3.0)
Outputs	2x HDMI Out: 19-pin Type A 2x NHD Stream Out (via 3x RJ-45 LAN, H.264/H.265) 1x Balanced Analog Audio Out (5-pin Phoenix Male Connector)
HDMI Standard	HDMI OUT 1: HDMI 2.0, HDCP 2.2 HDMI OUT 2: HDMI 1.4, HDCP 1.4
Audio Formats	2ch PCM, 16-bit, 48 kHz
NHD Encoding	H.264 / H.265 (selectable)
Input Resolutions (Max)	3840×2160 @ 30Hz 4:4:4
Output Resolutions (Max)	HDMI OUT 1: 3840×2160 @ 60Hz 4:4:4 HDMI OUT 2: 3840×2160 @ 30Hz 4:4:4 NHD OUT: 3840×2160 @ 30Hz (H.264/H.265)
Supported Standards	DCI | RGB
Communication and Control	
HDMI	OUT 1 – HDCP 2.2 | IN & OUT 2 – HDCP 1.4
USB	3x USB 3.0 Type-A device ports (1A per port) 2x USB 3.0 Type-B host ports (assignable)
RS-232	1x 4-pin Phoenix (API control & 12V DC output)
LAN	3x 8-pin RJ-45 Ethernet Ports, 10/100/1000 Mbps
Power	
Power Supply	20V DC 10A
Power Consumption	Idle: 7.5W | Maximum: 158W (4K full load)
Environmental	
Operating Temperature	0 to +45°C (32 to +113°F), 10% to 90%, non-condensing
Storage Temperature	−20 to +70°C (−4 to +158°F), 10% to 90%, non-condensing
Dimensions and Weight	
Rack Units/Wall Box	<1U
Height	42mm / 1.65in
Width	215mm / 8.46in
Depth	180.2mm / 7.09in
Weight	1.13kg / 2.49lbs
Regulatory	
Safety and Emission	CE | FCC | RoHS | RCM | EAC | UKCA

Note: WyreStorm reserves the right to change product specification, appearance or dimensions of this product at any time without prior notice.

Warranty Information

WyreStorm Technologies ProAV Corporation warrants that its products to be free from defects in material and workmanship under normal use for a period of five (5) years from the date of purchase. Refer to the Product Warranty page on wyrestorm.com for more details on our limited product warranty.